Operating Instructions

Series RT Spring Driven Hose Reels

Low Pressure Model Numbers:

RT402-OLP	RT605-OLP	RT450-OLP	RT835-OLP
RT403-OLP	RT802-OLP	RT465-OLP	RT850-OLP
RT405-OLP	RT803-OLP	RT625-OLP	RT450-OLPSM
RT406-OLP	RT805-OLP	RT635-OLP	RT650-OLPSM
RT602-OLP	RT425-OLP	RT650-OLP	RT835-OLPSM
RT603-OLP	RT435-OLP	RT825-OLP	RT850-OLPSM

Dimensions

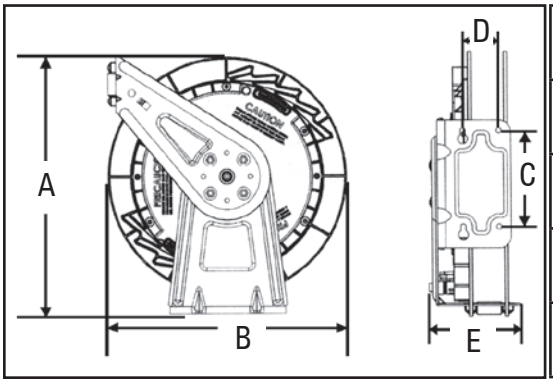

A	17 7/8”
B	16 1/2”
C	6”
D	2 1/4”
E	See page 6

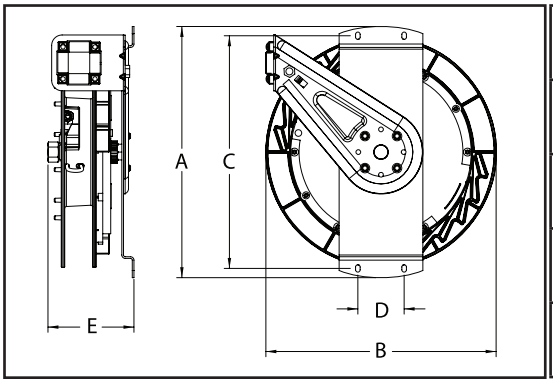

A	18”
B	16 7/16”
C	16 11/16”
D	3 5/16”
E	See page 7

SAFETY

Personal injury and/or equipment damage may result if proper safety precautions are not observed.

- Ensure that reel is properly installed before connecting input and output hoses.
- Bleed fluid/gas pressure from system before servicing reel.
- Before connecting reel to supply line, ensure that pressure does not exceed maximum working pressure rating of reel.
- Remember, even low pressure is very dangerous and can cause personal injury or death.
- Be aware of machinery and personnel in work area.
- If a leak occurs in the hose or reel, remove system pressure immediately.
- A high tension spring assembly is contained within the reel. Exercise extreme caution.
- Pull hose from reel by grasping the hose itself, not the control valve.
- Ensure that reel, hose, and equipment being serviced are properly grounded. Use an ohmmeter to check ground continuity.
- If reel ceases to unwind or rewind, remove system pressure immediately. Do not pull or jerk on hose!
- Treat and respect the hose reel as any other piece of machinery, observing all common safety practices.

Form# 1121-802A Rev: 9/2011

Reelcraft Industries, Inc. • 2842 E Business Hwy 30, Columbia City, IN 46725
Ph: 800-444-3134 / 260-248-8188 • Fax: 800-444-4587 / 260-248-2605
reelcraft@reelcraft.com • www.reelcraft.com

REELCRAFT®

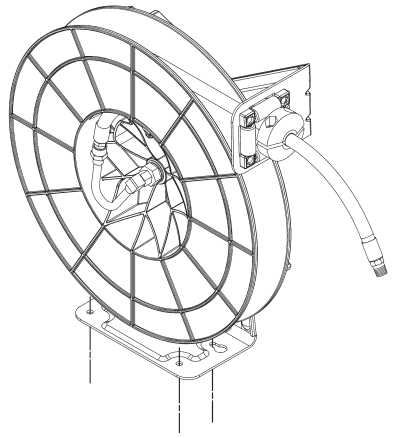

figure 1

Mounting the Hose Reel

Prior to mounting the hose reel, ensure that the supply line pressure does not exceed the maximum working pressure of the hose reel.

Do not exceed the maximum installation height of 16' unless the reel was specified differently when ordering. The maximum operating temperature is 150°F (66°C).

Unpack and inspect the reel for damage. Turn the spool by hand to check for a smooth operation.

Position the reel on the floor, wall or ceiling. Secure into place using four mounting bolts (not included). See the included mounting template for additional instructions for your specific mounting application. Depending on where the reel is placed, it may be necessary to adjust the hose bumper and guide arm to use the hose properly. See the instructions on the next page to adjust the hose bumper and reposition the guide arm.

Mounting Applications

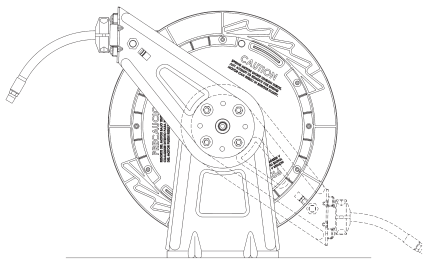

figure 2

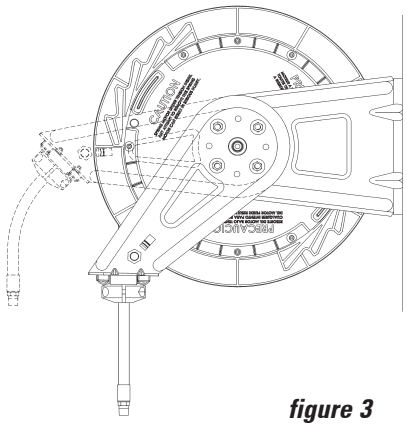

figure 3

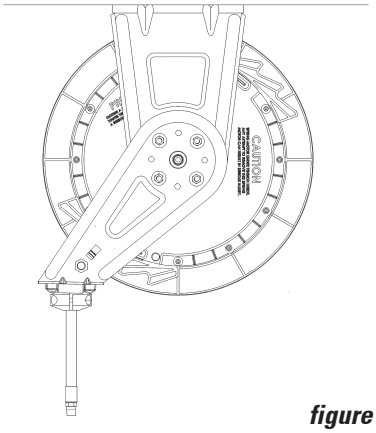

figure 4

Installing the Input Hose

Use a flexible hose connection at input. Do not use rigid plumbing. (input hose not included)

Apply pipe thread sealant to threads on standard reels.

Do not over tighten the connection. Recommended torque should not exceed 70 ft./lb.

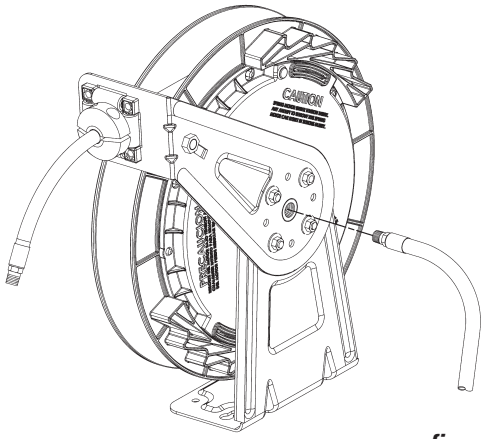

figure 5

Adjusting the Hose Bumper

Pull out the hose until the latch pawl is engaged.

The hose bumper may be adjusted by loosening the slotted screws shown in *figure 6*.

Slide the bumper to the desired position and tighten the screws BEFORE PULLING HOSE to disengage the latch pawl.

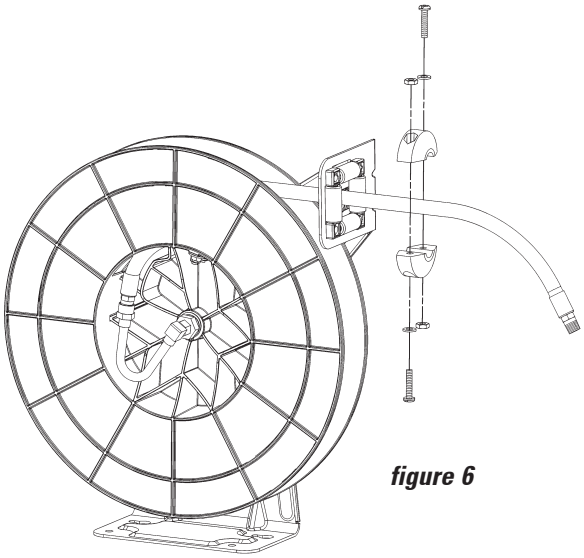

figure 6

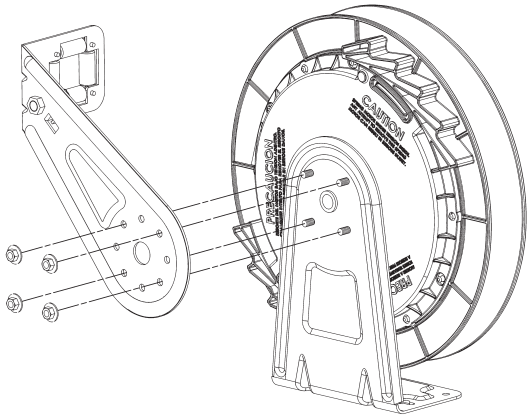

figure 7

Removing the Guide Arm

Pull out hose until the latch pawl is engaged. Remove bumper by removing the slotted screws (*figure 6*).

Disengage the latch pawl while maintaining a firm hold on spool. Turn the spool hand over hand approximately two or three revolutions in the direction of the drive spring until tension is removed.

Remove the 4 nuts holding the guide arm to base (*figure 7*).

Positioning the Guide Arm

Remove the guide arm and adjust to any of the seven positions shown in *figure 8*.

See *figures 2, 3, and 4*, for recommended Guide Arm positions for each mounting application.

Replace and tighten the 4 nuts.

Tighten the drive spring by turning the spool two or three revolutions and engage the latch pawl.

Pull the hose through the roller opening in the guide arm and replace the hose bumper (*figure 6*)

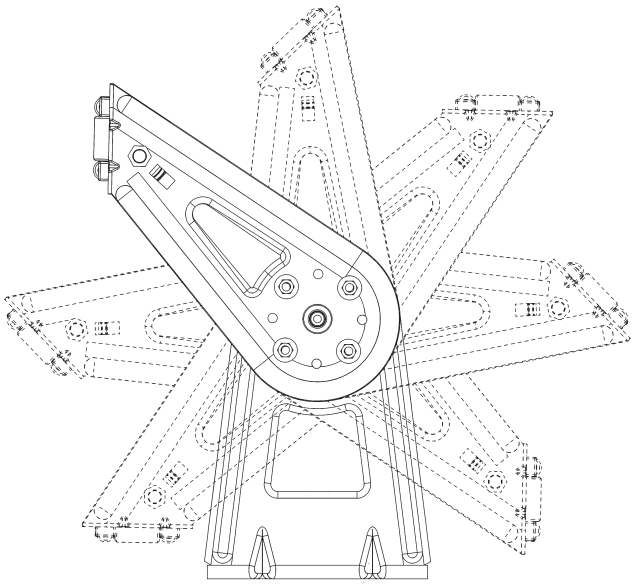

figure 8

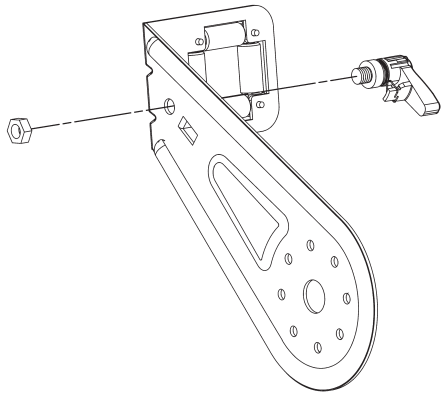

figure 9

Replacing the Latch Pawl

Remove the guide arm by following the procedure for “Removing the Guide Arm”. Remove the retaining nut as shown in *figure 9.*

Replace the latch pawl assembly.

Replace and tighten the retaining nut.

Replace the guide arm and hose bumper by following the procedure for “Positioning the Guide Arm”.

Replacing the Hose

To remove the hose

Pull out the hose leaving 2 to 3 feet on the spool. Engage the latch pawl. Remove the U-bolt nuts on the inside of the spool (*figure 10)*. Remove the U-bolt.

Unthread the hose at the connection to the swivel tube. Use a wrench on both fittings or the swivel may be damaged. Remove the hose.

To install the hose

Route the hose through the guide arm rollers and opening of the spool. Apply thread tape or sealant to hose threads.

Screw hose fitting into threaded fitting on swivel. Tighten connection with a wrench on both fittings. Install the U-bolt *(figure 10)*. Install hose bumper on working end of hose if required.

Disengage latch pawl and allow hose to retract.

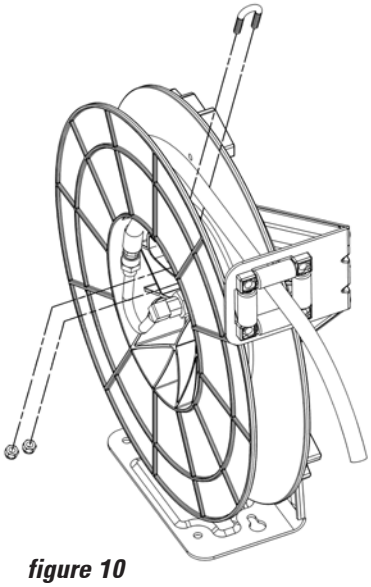

figure 10

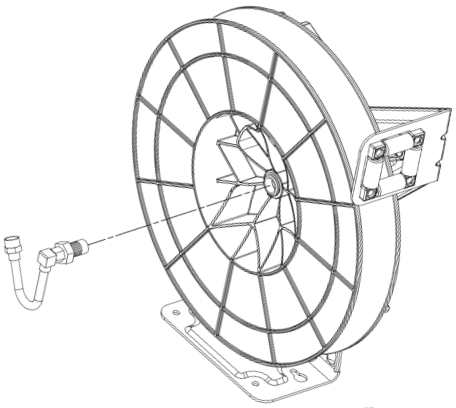

figure 11

Replacing the Swivel

Remove the hose.

See the procedure for “Replacing the Hose”.

Remove swivel by unscrewing the threaded stem from the main shaft *(figure 11)*.

Replace swivel by screwing threaded stem of swivel into main shaft of reel. Replace the hose.

Replacing the Spool Assembly

Attach the reel securely to prevent it from moving. Pull out the hose just until the latch pawl is engaged. Remove the hose bumper by removing the slotted screws *(figure 6)*.

Disengage the latch pawl while maintaining a firm hold on the spool. Turn the spool hand over hand approximately two or three revolutions until the spring tension is removed.

Unscrew the swivel stem from the main shaft. Next, remove the swivel by unscrewing the swivel from the hose *(figure 11).* Remove the retaining ring and spacing washer *(figure 12).* Pull the spool away from the base. Unwind the hose from the spool, remove the u-bolt *(figure 10)*.

Install the spool assembly by inserting the shaft of the base into the hex shaped opening of the spool. Install spacing washer and retaining ring as shown *(figure 12)*. Install the swivel by screwing the threaded stem of swivel into the main shaft of reel *(figure 11).*

Install the hose by screwing the hose fitting into the threaded fitting on the swivel. Tighten connection with a wrench on both fittings. Install the u-bolt *(figure 10)*.

Pull in the hose by turning the spool by hand. When the hose is completely wound onto the spool, turn the spool in the other direction two to three revolutions. Pull the hose through the roller opening in the guide arm and replace the hose bumper *(figure 6).*

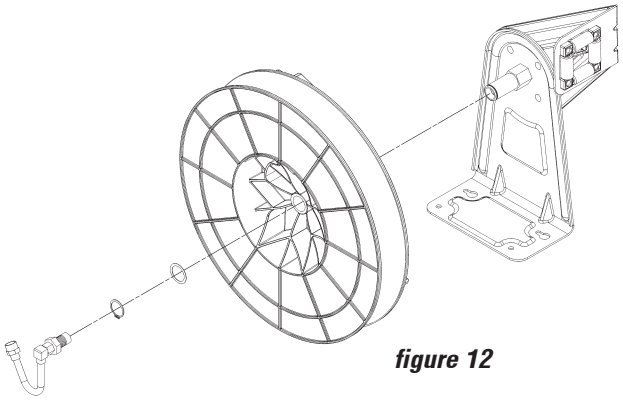

figure 12

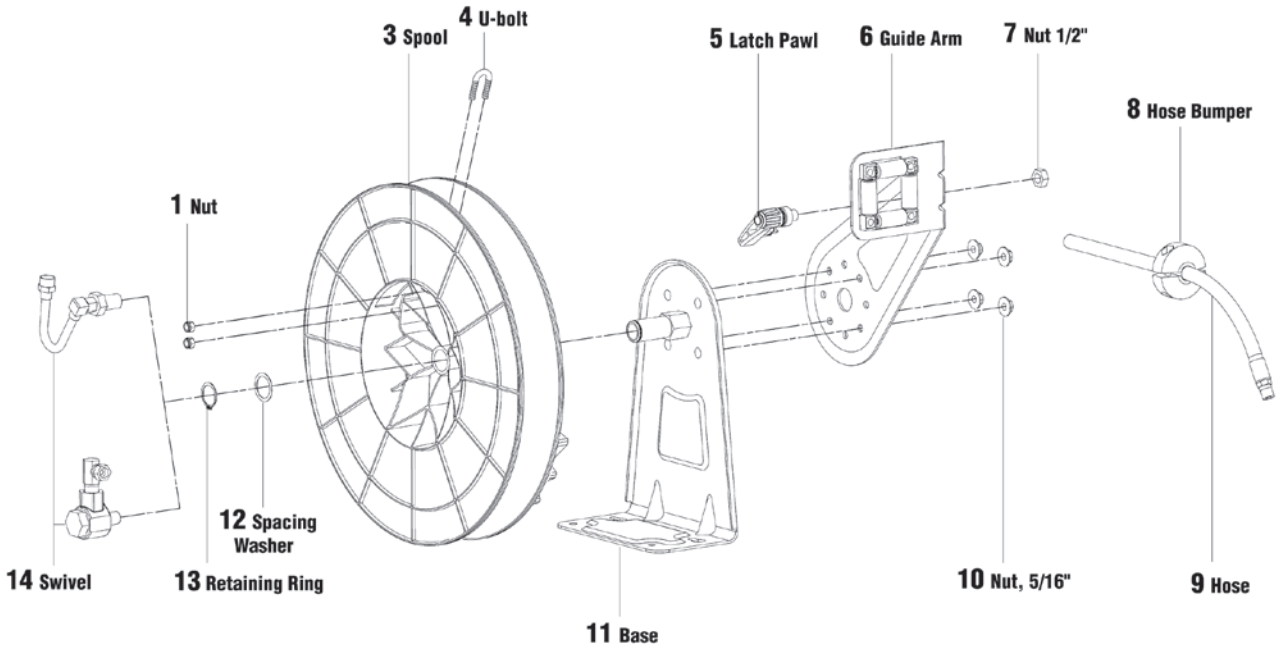

Item #	Description	# Req.	RT402-OLP	RT403-OLP	RT405-OLP	RT406-OLP	RT602-OLP	RT603-OLP	RT605-OLP	RT802-OLP	RT803-OLP	RT805-OLP
1	1/4-20 Lock Nut	2	261650-1	261650-1	261650-1	261650-1	261650-1	261650-1	261650-1	261650-1	261650-1	261650-1
3	Spool Assembly	1	600827	600827	600860	602239	600827	600827	600828	600879	600879	602011
4	U-Bolt	1	3-117440	3-117440	3-117440	3-117440	3-117440	3-117440	3-117440	3-117440	3-117440	3-117440
5	Latch Pawl Assembly	1	600823	600823	600823	600823	600823	600823	600823	600823	600823	600823
6	Guide Arm Assembly	1	600825	600825	600825	600825	600825	600825	600826	600826	600826	602014
7	Nut 1/2”	1	S76-108	S76-108	S76-108	S76-108	S76-108	S76-108	S76-108	S76-108	S76-108	S76-108
8	Hose Bumper	1	None	None	None	None	None	None	None	None	None	None
9	Hose Assembly	1	None	None	None	None	None	None	None	None	None	None
10	Nut 5/16”	4	261650-2	261650-2	261650-2	261650-2	261650-2	261650-2	261650-2	261650-2	261650-2	261650-2
11	Base Assembly	1	600824	600824	600824	600824	600824	600824	600833	600833	600833	602012
12	Spacing Washer	1	300034	300034	300034	300034	300034	300034	300034	300034	300034	300034
13	Snap Ring	1	300031	300031	300031	300031	300031	300031	300031	300031	300031	300031
14	Swivel Assembly	1	600886	600886	600886	600886	600886	600886	600886	600914	600914	600914
“E” Dimensions - See page 1			5 3/4”	5 3/4”	5 3/4”	5 3/4”	5 3/4”	5 3/4”	6 1/4”	6 1/4”	6 1/4”	7 3/4”

Item #	Description	# Req.	RT425-OLP	RT435-OLP	RT450-OLP	RT465-OLP	RT625-OLP	RT635-OLP	RT650-OLP	RT825-OLP	RT835-OLP	RT850-OLP
1	1/4-20 Lock Nut	2	261650-1	261650-1	261650-1	261650-1	261650-1	261650-1	261650-1	261650-1	261650-1	261650-1
3	Spool Assembly	1	600827	600827	600860	602239	600827	600827	600828	600879	600879	602011
4	U-Bolt	1	3-117440	3-117440	3-117440	3-117440	3-117440	3-117440	3-117440	3-117440	3-117440	3-117440
5	Latch Pawl Assembly	1	600823	600823	600823	600823	600823	600823	600823	600823	600823	600823
6	Guide Arm Assembly	1	600825	600825	600825	600825	600825	600825	600826	600826	600826	602014
7	Nut 1/2”	1	S76-108	S76-108	S76-108	S76-108	S76-108	S76-108	S76-108	S76-108	S76-108	S76-108
8	Hose Bumper	1	A1-HR1004-A	A1-HR1004-A	A1-HR1004-A	A1-HR1004-A	A1-HR1004	A1-HR1004	A1-HR1004	A2-HR1004-3	A2-HR1004-3	A2-HR1004-3
9	Hose Assembly	1	601001-25	601001-35	601001-50	601000-65	601013-25	601013-35	601013-50	601020-25	601022-35	601022-50
10	Nut 5/16”	4	261650-2	261650-2	261650-2	261650-2	261650-2	261650-2	261650-2	261650-2	261650-2	261650-2
11	Base Assembly	1	600824	600824	600824	600824	600824	600824	600833	600833	600833	602012
12	Spacing Washer	1	300034	300034	300034	300034	300034	300034	300034	300034	300034	300034
13	Snap Ring	1	300031	300031	300031	300031	300031	300031	300031	300031	300031	300031
14	Swivel Assembly	1	600886	600886	600886	600886	600886	600886	600886	600914	600914	600914
“E” Dimensions - See page 1			5 3/4”	5 3/4”	5 3/4”	5 3/4”	5 3/4”	5 3/4”	6 1/4”	6 1/4”	6 1/4”	7 3/4”

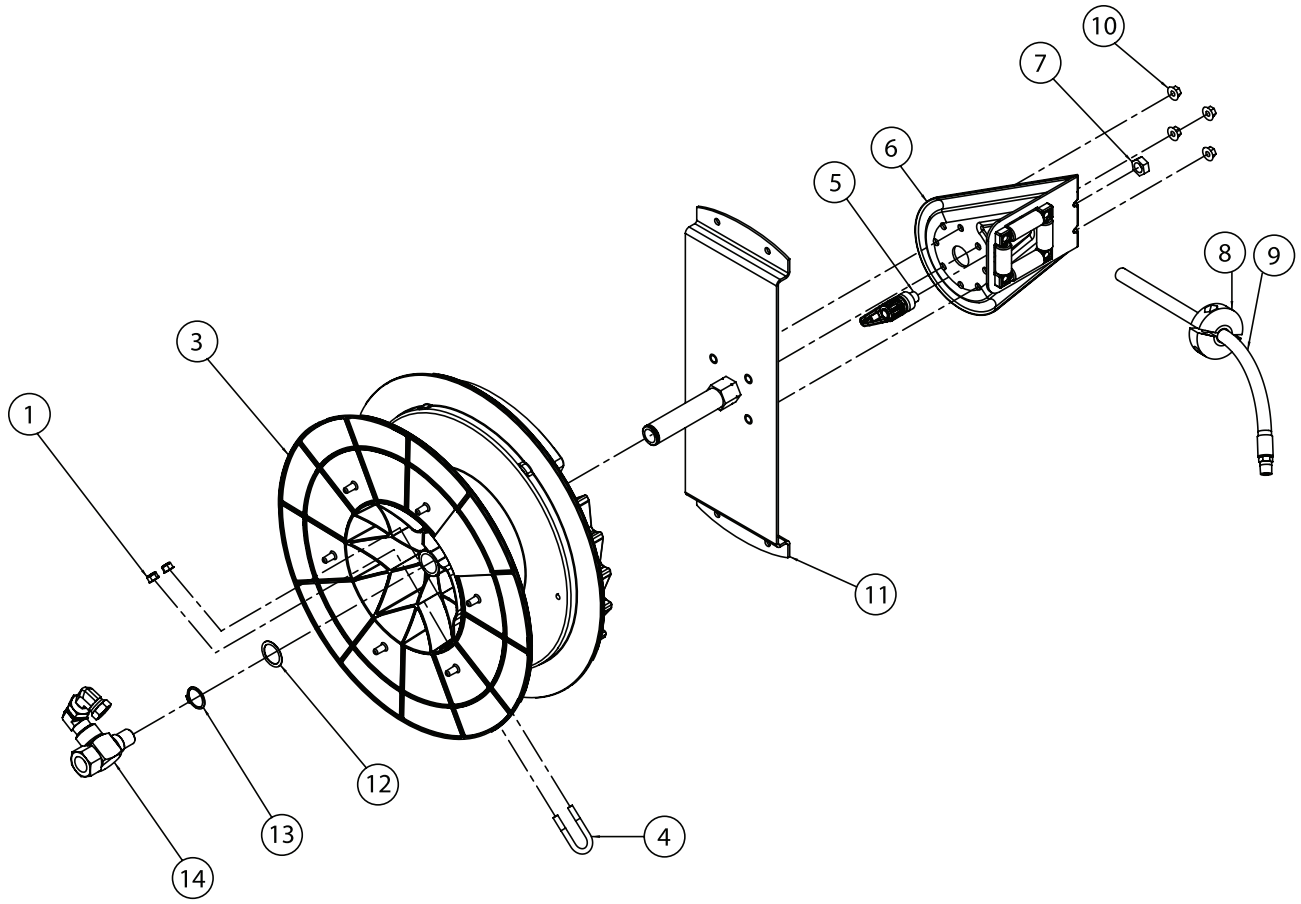

Item #	Description	# Req.	RT450-OLPSM	RT650-OLPSM	RT835-OLPSM	RT850-OLPSM
1	1/4-20 Lock Nut	2	261650-1	261650-1	261650-1	261650-1
3	Spool Assembly	1	600860	600828	600879	602011
4	U-Bolt	1	3-117440	3-117440	3-117440	3-117440
5	Latch Pawl Assembly	1	600823	600823	600823	600823
6	Guide Arm Assembly	1	600825	600826	600826	602014
7	Nut 1/2”	1	S76-108	S76-108	S76-108	S76-108
8	Hose Bumper	1	A1-HR1004-A	A1-HR1004	A2-HR1004-3	A2-HR1004-3
9	Hose Assembly	1	601001-50	601013-50	601022-35	601022-50
10	Nut 5/16”	4	261650-2	261650-2	261650-2	261650-2
11	Shaft / Bracket Assembly	1	602263	600264	602264	602265
12	Spacing Washer	1	300034	300034	300034	300034
13	Snap Ring	1	300031	300031	300031	300031
14	Swivel Assembly	1	602262	602262	602311	602311
“E” Dimensions - See page 1			6 1/8”	7 5/16”	7 5/16”	8 5/8”